ScanX Discover

Installation and Operating Instructions

EN

1705RevA

2138100300L41

CE

www.scanx-ndt.com

DÜRR NDT

Contents

EN

Important information

Product description

Installation

Operation

Troubleshooting

Appendix

EN

1 About this document

The Installation and Operating Instructions form an integral part of the appliance. They conform to the relevant version of the equipment and the technical standards valid at the time of installation.

DÜRR NDT cannot be held liable and cannot offer guarantees for the safe and smooth operation of this appliance in the case that notes and instructions contained in this Installation and Operating Instructions are not observed.

This translation of this Installation and Operating Instructions document has been carried out in good faith. The German version of the installation and operating instructions is relevant. DÜRR NDT does not accept any liability in the case of incorrect translation.

1.1 Introduction

Congratulations on your purchase of ScanX Discover HC or the ScanX Discover HR Digital Imaging System, a rugged portable imaging system manufactured by Air Techniques for DÜRR NDT. Each system has been designed and manufactured using state-of-the-art technology to produce the lightest, most portable, robust and dependable digital imaging system available. This manual covers the complete Discover product family listed below including devices with or without battery power.

Without Battery	
Designation	**Part No.**
Discover HC	2138100012
Discover HR	2138100010

With Battery	
Designation	**Part No.**
Discover HC-B	2138100011
Discover HR-B	2138100009

Designed and built exclusively for the demanding conditions encountered in portable radiography NDT applications, each system is extremely easy to deploy producing excellent quality digital images in seconds. This efficiency coupled with repeatable consistent image quality provides results that allow the user to make critical decisions on the spot eliminating the need to return for retakes.

The ScanX Discover HC and the ScanX Discover HR are hereafter referred to as ScanX in this manual. Review and follow the guidelines included in this manual to ensure that your ScanX gives the highest level of service. For product support and information on the ScanX, contact your authorized dealer; or visit the web site, www.ScanX-ndt.com.

1.2 Warnings and symbols

Warnings

The warnings in this document are intended to draw attention to possible injury to persons or damage to machinery. The following warning symbols are used:

General warning symbol is a symbol that indicates a hazard. It is composed of an equilateral triangle surrounding an exclamation mark. The safety alert symbol shall not be used to alert persons of property damage only accidents.

Voltage hazard that can be a caution or warning depending on the magnitude of the risk.

Warning - laser beam

The warnings are structured as follows:

SIGNAL WORD
Description of the type and source of danger.
Here you will find the possible results of ignoring the warning.
› Follow these measures to avoid the danger.

The signal word differentiates between four levels of danger:

DANGER: Indicates immediate danger of severe injury or death.

WARNING: Indicates possible danger of severe injury or death.

CAUTION: Indicates risk of minor injuries.

NOTICE: Indicates information is considered important, but not hazard-related (e.g. messages relating to risk of extensive material/property damage). The safety alert symbol shall not be used with this signal word. When a signal word is used for messages relating to property damage, NOTICE is the choice of signal word.

Knowledge of Warnings and Cautions.

Users must exercise every precaution to ensure personnel safety, and be familiar with the warnings and cautions presented throughout this manual and summarized below.

Warning Laser Beam

- ScanX contains a laser and is a Class 1 [Class 1 (IEC 60825)] Laser Product. Use of controls or adjustments or performance of procedures other than those specified herein may result in hazardous radiation exposure. The laser is on only during an active scan.
- Alerts user that Scanx becomes a Class 3B device when opened. Only a trained technician from an authorized dealer should remove a cover from the ScanX. Direct eye contact with the output beam from the laser may cause serious damage and possible blindness.

Electric shock

Risk

- The main power switch is the main power disconnect device.
- Use only the line cord provided with the unit.
- Use only grounded electrical connections.
- To avoid risk of electric shock, fire, short-circuit or dangerous emissions, never insert any metallic object into the equipment.
- Only use connection cable(s) delivered with the device.

Electric shock

Risk

- Check the device cables for possible damage before switching on. Damaged cables, plugs and sockets must be replaced before use.
- Never touch open supply outlets and persons simultaneously.
- Do not locate unit where it could be sprayed with water, or in a damp environment.

Caution

- While the ScanX has been designed to minimize exposure of personnel to hazards, using the device not in conformance with the instructions specified in this manual may result in permanent failure of the unit or unsafe operation.
- Only trained professionals should use this device. Use of this device, other than as described in this manual, may result in injury.
- Before every use, the operator must check the functional safety and the condition of the device. The operator must be knowledgeable in the operation of the device.
- Equipment Lifting. ScanX weighs up to 21 kg. Two people may be needed to prevent injury when lifting.
- Operate ScanX in dry environment. To prevent injury from fire or electrical shock, do not expose this appliance to rain or moisture.
- Use of controls or adjustments or performance of procedures other than those specified herein may result in hazardous radiation exposure
- The use of ACCESSORY equipment not complying with the equivalent safety requirements of this equipment may lead to a reduced level of safety of the resulting system.
- Use of ACCESSORIES or cables other than those specified or provided by the manufacturer may result in increased EMISSIONS or decreased IMMUNITY of the EQUIPMENT.

EN

Notice

The following Notices are used in this manual to denote risk of extensive material/property damage or information of special importance in scanner operation:

NOTICE
Do Not Attempt Internal Service.

- All repairs above and beyond simple maintenance may only be carried out by DÜRR NDT personnel or by a suitably qualified person approved by DÜRR NDT.
- Contact your local authorized dealer for service. Failure to heed this directive may result in equipment damage and voiding the warranty.

NOTICE
Do Not Attempt Internal Service.

- Do not use damaged PSPs. Damaged PSPs may not provide reliable diagnostic images.
- Laser product compliance: Air Techniques meets the requirements of IEC 60825-1 Ed. 3 (2014).
- EMC Compliance requirements. Use USB cables not exceeding 3m to connect between the computer and the scanner. Cable lengths greater than 3m may violate EMC compliance. Stacking or using the scanner adjacent to other equipment may violate EMC compliance and interfere with the scanner operation
- PSP preparation: Completely clean and erase PSPs before taking an X-ray exposure. See the PSP PREPARATION section of this manual.
- Use care in handling PSPs: Avoid fingerprints and scratching. Refer to the instructions provided with the PSP package for further information on handling
- Use of other manufacturer's imaging PSPs. Do not put PSPs designed for drum-type or other scanners in the ScanX. The hooks and/or frames on the ends or around these PSPs, or PSPs of different thickness (especially thicker ones) will damage the ScanX.

NOTICE
Do Not Attempt Internal Service.

- Equipment disposal. Disposal of ScanX units, including internal batteries, electronic circuitry and PSPs must be accomplished only at the appropriate facilities for recovery and recycling. Make sure to dispose of such items in accordance with current federal, national, state and local government rules and regulations.
- Check device prior to use. The battery fuse must be installed in order to operate the ScanX battery unit.
- Keep device dry. Do not spray solvents or liquid directly on the scanner.
- Insert PSP only. Avoid damage to the ScanX transport by making sure that the PSP protector does not get pulled into the transport along with the PSP.
- Prevent battery discharge. Unless the ScanX is in use under battery power, the ON/OFF (BATTERY) switch must always be in the OFF position to prevent battery discharge, and/or allow re-charging.

EN

Markings and other symbols

The following markings or symbols are used on the equipment or in this manual to denote information of special importance:

Note, e.g. specific instructions regarding efficient and cost-effective use of the unit.

Observe the accompanying documentation.

CE-labeling.

Indicates date of manufacture

Identifies the name of the manufacturer.

Dispose of correctly in accordance with EU Directive 2012/19/EU (WEEE).

Do not reuse

Wear hand protection.

Switch off and de-energise the device (e. g. unplug from mains).

c UL US LISTED

LABORATORY EQUIPMENT 60CB E234737

Indicates that the ScanX is a UL Listed product.

Manufacturer:

Air Techniques, Inc.
1295 Walt Whitman Road
Melville, New York 11747 USA

Dealer:

Dürr NDT GmbH & Co. KG
Höpfigheimer Straße 22
74321 Bietigheim-Bissingen, Germany
Tel: +49 7142 99381-0
Fax: +49 7142 99381-299
http://www.scanx-ndt.com

Labels

The following labels are used on the equipment to supply laser source values and safety information.

The warning label below identifies the ScanX as a Class I Laser Product (IEC)]. It also alerts the user to Class 3B Laser potential danger to humans in the event the product is opened during service.

There is no laser radiation from this product when operated and maintained as instructed.

Warning - laser beam.

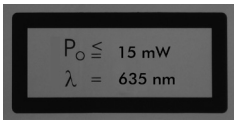

Maximum laser power output and laser beam wavelength.

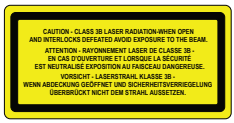

Alerts user that Scanx becomes a Class 3B device when opened.

1.3 Copyright information

All circuits, processes, names, software programs and appliances quoted are protected under industrial property rights. Printing or copying of these Installation and Operating Instructions, even excerpts thereof, may only be carried out with the written approval of DÜRR NDT.

EN

2 Safety

The unit has been developed and designed appropriately such that hazards are largely excluded if the unit is used in accordance with its intended use. Nevertheless, residual hazards may remain. Therefore, please note the following.

2.1 Intended use

The unit is intended to be used for scanning and processing digital images exposed on Phosphor Storage Plates (PSPs) in industrial applications.

2.2 Improper use

Any other usage or usage beyond this scope is deemed to be improper. The manufacturer accepts no liability for damages resulting from this. In these cases the user/operator will bear the sole risk.

WARNING
Risk of explosion due to ignition of combustible materials

› Do not operate the unit in any rooms in which inflammable mixtures may be present, e.g. in operating theatres.

2.3 General safety information

› When operating this device always observe all guidelines, laws, and other rules and regulations that are applicable at the site of operation.
› Prior to each use, check condition of the device and make sure it is in perfect working order.
› Do not convert or modify the units.
› Observe the Installation and Operating Instructions.
› Make the Installation and Operating Instructions available to the person operating the device at all times.

2.4 Qualified personnel

Operation

Persons who operate the units must ensure safe and correct handling based on their training and knowledge. Make sure to Instruct or have every user instructed in handling the unit.

Installation and repairs

› All installation, resetting, alteration, expansion and repair must be carried out either by DÜRR NDT personnel or by a suitably qualified person approved by DÜRR NDT.

2.5 Protection from electric shock

› When working on the units observe all the relevant electrical safety regulations.
› Immediately replace any damaged cables or plugs.

2.6 Only use genuine parts

› Only parts specified by DÜRR NDT or specifically approved accessories and special accessories may be used with this appliance.
› Only use original working parts and spare parts.

Result:

DÜRR NDT accepts no liability for damage or injury resulting where accessories or special accessories or where non-original parts or spare parts not specifically approved have been used.

2.7 Transport

Only the original packing ensures optimum protection for the appliance during transport.

Where required original unit packing for this unit can be ordered from DÜRR NDT.

DÜRR NDT cannot be held responsible for any damage to the unit resulting from transport in unsuitable packaging; this is also valid during the period of guarantee.

› Only transport the unit in its original packing.
› Keep all packaging away from children.
› Do not expose the unit to any strong vibrations or shocks.

2.8 Disposal

Unit

Dispose of the unit correctly. Within the European Union dispose of the unit according to EU-directive 2012/19/EU (WEEE). Outside the European Union the unit must be disposed of only at the appropriate facilities for recovery and recycling in accordance with the locally applicable regulations.

Battery pack

The battery pack contains lithium compounds.

Dispose of the lithium battery pack properly in accordance with the locally applicable regulations.

PSP

The PSP contains barium compounds.

› Dispose of the image plate properly in accordance with the locally applicable regulations.
› In Europe, dispose of the image plate in accordance with waste code 090199 “Wastes not otherwise specified”. Disposal as domestic waste is possible.

3 Overview

3.1 General

The ScanX is a self-contained computed radiography (CR) imaging plate scanner/eraser system that utilizes reusable photostimulable or PSPs in place of X-ray film to produce quality digital radiographs. The PSPs are durable and reusable several hundred of times. Upon exposure to X-rays, the PSP stores a latent image, which is scanned by the ScanX. After scanning, the image is processed via the user-supplied computer running authorized software and ready for viewing in seconds. In addition to immediate display of the resultant images, the software allows image enhancement processing, storage (hard drive or CD), and sharing/retrieval.

An additional feature of the ScanX includes a patented in-line PSP erase function that removes the latent image from the PSP immediately after scanning. This design provides an efficient one-operation scanning and erasing process leaving the user with a PSP ready for the next X-ray procedure. All ScanX Discover models accept all brands of PSPs in all standard sizes and up to 35.5cm wide by any practical length.

The flexible and rugged design allows ScanX to be used on a counter top or inserted into either an optional hard or soft carrying case for safe transport anywhere image scanning is required.

A Discover Model to Suit Specific Needs

While each model is capable of processing PSPs, the ScanX Discover HC and the ScanX Discover HR systems are designed to process the resulting images differently.

ScanX Discover HC: The ScanX Discover HC is optimized for high-contrast, medium resolution applications.

ScanX Discover HR: The ScanX Discover HR displays the highest resolution available when used with the appropriate PSP.

Rechargeable Battery: Both the ScanX Discover HC and Discover HR have models that have a built-in battery. This lithium ion rechargeable battery ensures up to 4 hours of standby readiness power, with up to 20 minutes of continuous ILE scanning operation, making the ScanX a truly portable computed radiography system suited for the rigors of field work applications.

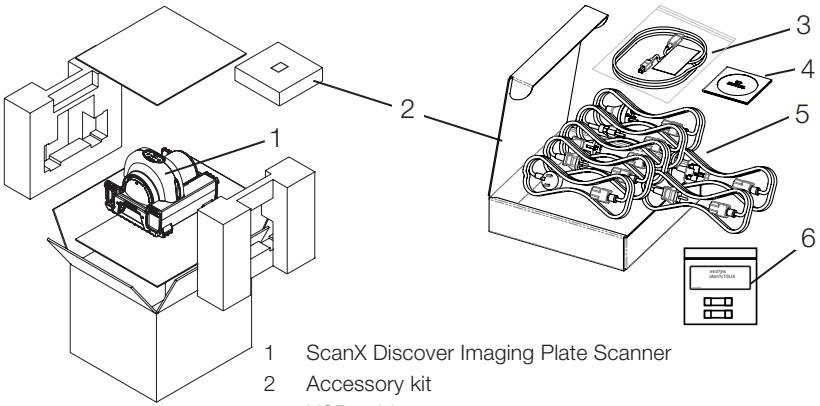

1 ScanX Discover Imaging Plate Scanner
2 Accessory kit
3 USB cable
4 CD Disk containing Utilities and Operator's Manual
5 Mains cables (country specific)
6 Fuse kit

EN

3.2 Scope of delivery

The following items are included in the scope of delivery (possible variations due to country-specific requirements and/or import regulations):

ScanX Discover HR (no battery)
Imaging Plate Scanner 2138100010
– ScanX Discover HR no battery base unit.
– Quick Start Instructions.

Accessory Kit: 2138100043
– Mains cables (See paragraph 3.4.)
– USB cable
– Fuse Kit
– CD Disk containing Drivers, Utilities and Operator's Manual

ScanX Discover HR-B (with battery)
Imaging Plate Scanner 2138100009
– ScanX Discover HR with battery base unit.
– Quick Start Instructions.

Accessory Kit: 2138100043
– Mains cables (See paragraph 3.4.)
– USB cable
– Fuse Kit
– CD Disk containing Drivers, Utilities and Operator's Manual

ScanX Discover HC (no battery)
Imaging Plate Scanner 2138100012
– ScanX Discover HC no battery base unit.
– Quick Start Instructions.

Accessory Kit: 2138100043
– Mains cables (See paragraph 3.4.)
– USB cable
– Fuse Kit
– CD Disk containing Drivers, Utilities and Operator's Manual

ScanX Discover HC-B (with battery)
Imaging Plate Scanner 2138100011
– ScanX Discover HC-B with battery base unit.
– Quick Start Instructions.

Accessory Kit: 2138100043
– Mains cables (See paragraph 3.4)
– USB cable
– Fuse Kit
– CD Disk containing Drivers, Utilities and Operator's Manual

3.3 Accessories

The following articles are necessary for the operation of the unit, depending on the application:

ScanX View software

ScanX View Basic 2134-745-02
ScanX View X-ray module Imaging Plate Scanner 2134-745-04
ScanX View DICONDE 2134-745-05
ScanX View adapted report. 2134-745-08
ScanX View Viewer 2134-745-09
ScanX View measuring tool (wall thickness and corrosion) 2134-745-10
ScanX View PT Tool 2134-745-11

PSPs

Normal resolution
(1 piece) Not available on the USA market.

PSP 6x24 cm CRIP0624109
PSP 6x48 cm CRIP0648109
PSP 10x24 cm CRIP1024109
PSP 10x48 cm CRIP1048109
PSP 18x24 cm CRIP1824109
PSP 24x30 cm CRIP2430109
PSP 30x40 cm CRIP3040109
PSP 35x43 cm CRIP3543109

Further PSP formats available on request

High resolution
(1 piece) Not available on the USA market.

PSP 6x24 cm HDIP0624108
PSP 6x48 cm HDIP0648108
PSP 10x24 cm HDIP1024108
PSP 10x48 cm HDIP1048108
PSP 18x24 cm HDIP1824108
PSP 24x30 cm HDIP2430108
PSP 30x40 cm HDIP3040108
PSP 35x43 cm HDIP3543108

Normal resolution (H CR)
(1 piece) Dürr NDT H CR

PSP 10x24 cm HR1024CM113
PSP 10x48 cm HR1048CM113
PSP 18x24 cm HR1824CM113
PSP 24x30 cm HR2430CM113
PSP 35x43 cm HR3543CM113

High resolution (X HD)
(1 piece) Dürr NDT X HD

PSP 10x48 cm XL1048CM113
PSP 18x24 cm XL1824CM113
PSP 24x30 cm XL2430CM113
PSP 35x43 cm XL3543CM113

Highly sensitive (G CR)
(1 piece) Dürr NDT G CR

PSP 10x24 cm GP1024CM113
PSP 10x48 cm GP1048CM113
PSP 18x24 cm GP1824CM113
PSP 24x30 cm GP2430CM113
PSP 35x43 cm GP3543CM113

Ultra High resolution (UH)
(1 piece) Dürr NDT UHIP

UH-IP 10x24cm UHIP100001
UH-IP 35x43cm UHIP100002
UH-IP 18x24cm UHIP100005
UH-IP 6x24cm UHIP100006
UH-IP 10x40cm UHIP100007
UH-IP 24x30cm UHIP100008

Barrier envelops

Barrier envelop 10x24 cm LIPS1024210
Barrier envelop 10x48 cm LIPS1048210

PSP protectors

PSP Protector 8” x 10” 2138100035
PSP Protector 10” x 12” 2138100036
PSP Protector 14” x 17” 2138100037
PSP Protector 12” x 17” 2138100038

3.4 Special accessories

The following optional items can be used with the device:

USB cable 3m 9000-119-067
Mains cable for Australia
Mains cable for North America
Mains cable for Continental Europe
Mains cable for Denmark
Mains cable for Swiss
Mains cable for Italy
Mains cable for United Kingdom
Part numbers of mains cable on request
Feeder extension kit
2 drum extensions 2138100039
Guide Kit #3 and #4 PSP Guides . 2138100040

Rigid cassette (1 piece)

Rigid cassette 18x24 cm KUNKA182408
Rigid cassette 24x30 cm KUNKA243007
Rigid cassette 30x40 cm KUNKA304010
Rigid cassette 35x43 cm KUNKA354307

Foil sleeve

Foil sleeve 10x24 cm (4 pieces). . .2134-021-00
Foil sleeve 10x48 cm (4 pieces). . .2134-023-00
Foil sleeve 24x30 cm (4 pieces). . .2134-024-00
Foil sleeve 30x40 cm (4 pieces). . .2134-033-00
Foil sleeve 35x43 cm (4 pieces). . .2134-034-00
Foil sleeve 6x24 cm (1 piece). . . NACS0624107
Foil sleeve 6x48 cm (4 pieces). . NACS0648107
Foil sleeve 18x24 cm (1 pieces . NACS1824107

3.5 Disposable materials

The following materials are consumed during operation of the device`` and must be reordered separately:

Barrier envelops

See Barrier envelops”

Cleaning

IP cleaning wipes (10 pcs.) CCB351A100
Cleaning sheet, Package of 25 . . . 2138100034
Cleaning sheet, Package of 12 . . . 2138100033

3.6 Wear parts and spare parts

Wiper Brush, package of 10 2138100032
Transport belt drive assembly,
set of 4 2138100108
Fuse, package of 2 2138100111
Additional spare parts on request.

PSPs

See “3.3 Accessories and 3.4 Special accessories”

EN

4 Technical data

4.1 Imaging plate scanner

Electrical data for the device		
Voltage	VAC	100 to 240
Maximum voltage fluctuation	%	± 10
Frequency	Hz	50/60
Protection class		1
Type of protection		IP20
Maximum power consumption	W	< 140
Maximum current consumption	A	1.4

General technical data			
Dimensions (W x H x D)	cm	40 x 36 x 46	
	inch	15.5 x 14 x 18	
Weight (approximate)	kg	Without Battery 20	With Battery 21
	lbs	44	46
Maximum feeding width for PSP	cm	35.6	

Ambient conditions during operation		
Temperature	°C	-7 to +46
	°F	-21 to 115
Relative humidity (Non-condensing)	%	5 to 95
Height above sea level	m	< 2000

Ambient conditions during storage and transport		
Temperature	°C	-29 to 55
	°F	-21 to 130
Relative humidity (Non-condensing)	%	5 to 95
Air pressure	hPa	750 to 1060
Height above sea level	m	< 16000

Note: ScanX resolution is dependent on operating mode and specific PSP type.

Resolution		Horizontal	Vertical
Discover HR	Pixel size µm	130 to 35	130 to 28
Discover HC	Pixel size µm	130 to 100	130 to 70

EN

Compliance Data:	
Laser Classification:	Class I Laser Product Compliance with 21 CFR 1040.10 and IEC 60825-1

Classification
Class 1 (per 60601), No Applied Parts, Portable, Equipment not suitable for use in the presence of flammable and combustible mixture(s). Protection against ingress of liquids -Ordinary

Duty Cycle		
Duty cycle S2 (according to VDE 0530-1)	min	60
Duty cycle S6 (according to VDE 0530-1)	%	70

Electromagnetic Interference
Electromagnetic interference between the equipment and other devices can occur. Do not use the equipment in close conjunction with sensitive devices, or devices creating high electromagnetic disturbances. Refer to EMC Compliance Requirements notice provided by notice paragraph of Section 1.

4.2 PSP

Ambient conditions during operation		
Temperature	°C	18 - 45
Relative humidity	%	< 80

Ambient conditions during storage and transport		
Temperature	°C	< 33
Relative humidity	%	< 80

4.3 Scan mode

The scan modes listed are standard configurations. These can be amended as, and if, required. For this reason the listed scan modes can vary from the scan modes actually saved to the appliance.

Additionally, not all scan mode values have been listed here. Further information concerning the various scan modes can be obtained by contacting DÜRR NDT.

The basic local resolution can vary depending on the actual x-ray source, exposure conditions and PSP type.

HC Scanning mode	
ParamName	Discover HC NDT 100.9µm
Res	100.93
PMT_HV	450
Threshold	200
ImgTypes	Extra
Laser	8
Pentaspd	4000

HR Scanning mode (BAM mode)	
ParamName	Discover HR NDT 20µm
Res	20
PMT_HV	450
Threshold	200
ImgTypes	Extra
Laser	6
Pentaspd	2114

EN

4.4 Type plate

The model identification plate is located on the rear side of the base foot.

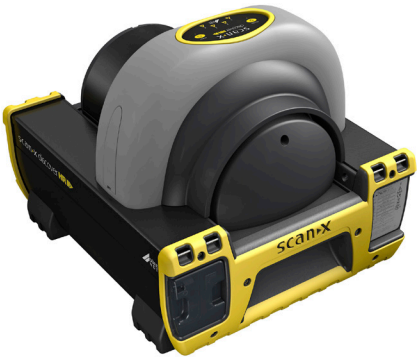

Conformity assessment

This device has been subjected to conformity acceptance testing in accordance with the current relevant European Union guidelines. This equipment conforms to all relevant requirements.

UL approval

This Class A digital apparatus complies with EN 61326-1: 2013 & IEC 61010-1 3rd Edition.

This equipment has been tested and found to comply with the limits for a class A digital device, pursuant to Part 15 of the FCC rules.These limits are designed to provide reasonable protection against harmful interference when the equipment is operated in a commercial environment. This equipment generates, uses, and can radiate radio frequency energy and, if not installed and used in accordance with the instruction manual, may cause harmful interference to radio communications. Operation of these equipment in a residential area is likely to cause harmful interference in which case the user will be required to correct the interference at his own expense.

FDA

Complies with FDA performance standards for laser products except for deviations pursuant to Laser Notice No. 50, date (June 24,2007).

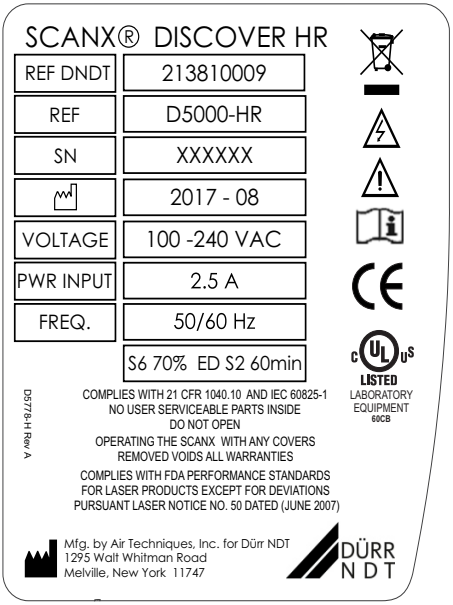

REF Order number

SN Serial number

EN

5 Function

5.1 Power panel

1 Main Power Switch (I/0)
2 USB Type B Connector
3 IEC Connector

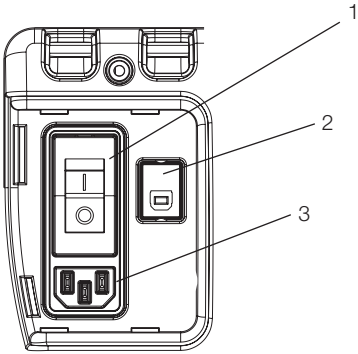

Discover without Battery

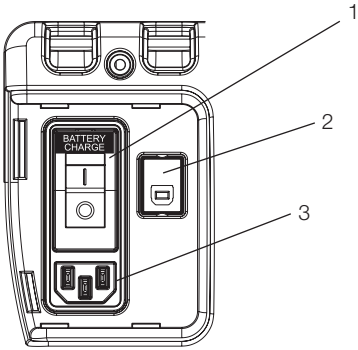

Discover with built-in Battery

The Main Power Switch (I/0) is a circuit breaker that controls the application of ScanX operating power and protects against shorts in the internal electrical circuits.

Must be set to the ON (I) position when charging the battery.

The USB Type B Connector provides USB connection from the computer via the supplied USB Computer Connector Cable.

The IEC Connector provides connection of Mains outlet power via supplied line cord.

5.2 Battery power control/status

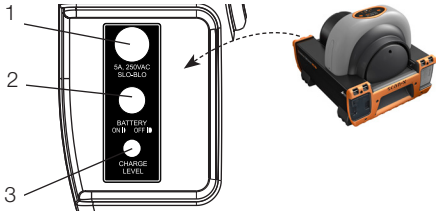

1 5A, 250VAC Slow Blow Fuse
2 BATTERY ON/OFF Switch
3 CHARGE LEVEL Indicator

ON/OFF (BATTERY) must be set to the OFF position when not using the battery

The slow blow fuse protects the battery pack from excessive current conditions.

The BATTERY ON/OFF Switch is a push button switch controlling the battery function as follows.

1. When set in the ON position (depressed and flush with the panel), this switch allows the ScanX to operate from battery power. While engaged, the CHARGE LEVEL Indicator illuminates.
2. When placed in the OFF position (raised position), the switch removes the battery power preventing battery discharge.

The CHARGE LEVEL Indicates the battery power is activated, this tri-color LED indicates battery status:

1. Illuminates GREEN when approximately 10% and above of working battery charge capacity is present.
2. YELLOW means less than 10% of battery charge capacity is present. Recommend recharging at this level.
3. Illuminates RED momentarily, then extinguishes means battery is fully used.

EN

5.3 Membrane keypad and indicators

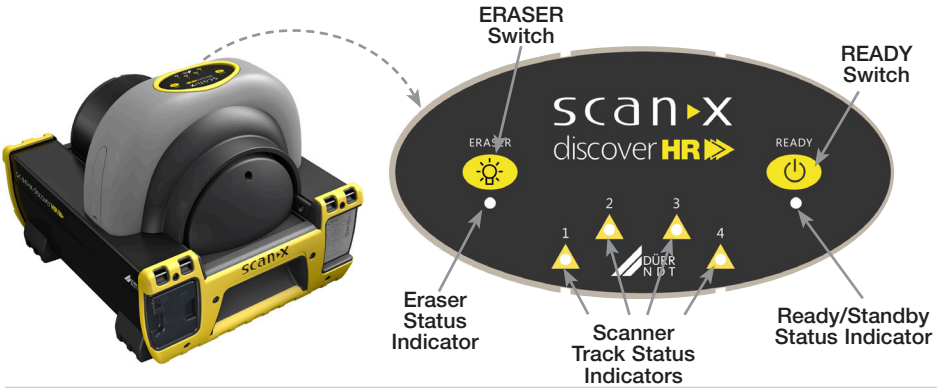

Membrane Keypad and Indicator Functions	
Item	**Function**
READY Switch	Toggles between the Standby and Ready mode as follows: 1. Press to switch from the Standby mode to the Ready mode. 2. Press and hold down for at least 2 seconds to switch to the Standby mode from the Ready mode.
Ready/Standby Status Indicator (Green LED)	Illuminates green to indicate that the ScanX is Ready for operation. When extinguished, it indicates that the ScanX is in the Standby mode.
ERASER Switch	Sets the erase function to operate in one of three modes: 1. Press the switch once to turn the erase function ON using one row of red LED erase lights. 2. Press the switch a second time to keep the erase function ON adding a second row of red LED erase lights. 3. Press the switch a third time to extinguish all red LED erase lights and turn the erase function completely OFF. The switch has no effect once the PSP scanning operation begins.
Note:	When the Eraser Status Indicator displays a burst of approximately 5 quick flashes, it is alerting the user that the erase function is reduced due to a high temperature condition. The user can continue scanning with the reduced function or wait for the full erase function to return when the temperature cools.
Eraser Status Indicator (Blue LED)	Displays the erase function status as set by the ERASER Switch: 1. Illuminates steady blue to indicate that the erase function is ON using one row of red LED erase lights. 2. Flashes blue twice to indicate that the erase function is ON using the two rows of red LED erase lights. 3. Extinguishes to indicate that the erase function is OFF and all red LED erase lights are extinguished.
Scanner Track Status Indicators (Bi-Color LEDs)	Displays the scanner operational status: 1. Illuminates green when the scanner has been activated, indicating that a PSP can be fed into the ScanX. 2. Illuminates yellow, indicating the PSP has been sensed and the scanner is transporting the PSP.

Only qualified specialists or persons trained by DÜRR NDT may install, connect and commission the appliance.

6 Requirements

6.1 Installation/setup room

The room chosen for set up should fulfil the following requirements:

- Closed, dry, well-ventilated room
- It should not be a room made for another purpose (e.g. boiler room or wet cell).
- Max. light intensity 1000 Lux, no direct sunlight at the place of installation of the unit
- There should be no large fields of interference (e.g. strong magnetic fields) present that can interfere with the correct operation of the unit.
- Refer to the requirements for environmental conditions in “4 Technical data”.

6.2 System requirements

See Appendix A for computer system requirements.

6.3 Monitor

The monitor must comply with the requirements for digital X-ray with higher light intensity and high contrast range (according to EN 25580).

Strong ambient light, direct sunlight and reflections can reduce the diagnostic usefulness of the x-rays.

NOTICE
Risk of damage to sensitive components in the unit as a result of shocks or vibrations

› Do not expose the unit to any strong vibrations or shocks.
› Do not move the unit during operation.

6.4 Carrying the scanner

- Only lift the unit by the front and rear handrails.
- Never lift the unit by its housing.

6.5 Setting up the scanner

Portable and mobile HF communication appliances can interfere with the effectiveness of electrical appliances such as imaging plate scanners.

- Do not stack the appliance next to or together with other appliances.
- If the appliance is to be used stacked next to or used together with other appliances, monitor the appliance in this configuration to ensure normal operation.

The unit can be set up on a any table or level flat surface capable of supporting the weight (See “4.1 Imaging Plate scanner”).

7 System setup

NOTICE
The Battery fuse must be installed in order to operate the ScanX battery.

7.1 Battery fuse installation

Install the supplied 5A fuse into the ScanX panel as follows:

- Insert the fuse cartridge into the fuse holder hole.
- Secure the fuse by twisting the fuse cap 1/4 turn clockwise.

7.2 Software installation

ScanX is designed to be installed by your authorized dealer. The user must provide appropriate and compliant computer hardware where ScanX View or an authorized third-party imaging program is installed to operate ScanX. Smooth operation of the ScanX hardware and software can be affected through specific hardware and software incompatibility on site at the client despite meeting system requirements. Where further systems are connected to the PC please note that this may change the system requirements. Observe the system requirements for all connected systems.

EN

7.3 Initial connection procedure

Perform the following procedure to connect the ScanX (with or without battery) for operation to a computer for the first time.

- Make sure the computer meets all requirements (see Appendix A) necessary to support ScanX operation. Set up the computer according to the manufacturer's recommendations.
- Verify that an authorized imaging software and the supplied USB drivers are installed properly on the computer.
- Connect the high speed USB cable between the USB Type B connector located on the ScanX panel and the USB Type A connector located on the computer.
- Connect the line cord between the Mains outlet and the IEC connector located on the ScanX panel.
- Turn ON the ScanX main power by placing the rocker switch on the Built-In Control/Connector panel to the ON (I) position. The scanner is now in the Standby mode.
- Switch the scanner from standby to ON by pressing the membrane READY switch (⏻) on the Membrane Keypad Panel on the top of the scanner. Verify that the green LED indicator above the READY switch illuminates.
- With both the ScanX and computer turned on, Windows detects the ScanX as a new USB Device and the Found New Hardware Wizard will appear. Windows should automatically find the drivers installed from the ScanX Drivers and Utilities Disk.

NOTICE
The Main Power Switch is the Mains disconnect device.

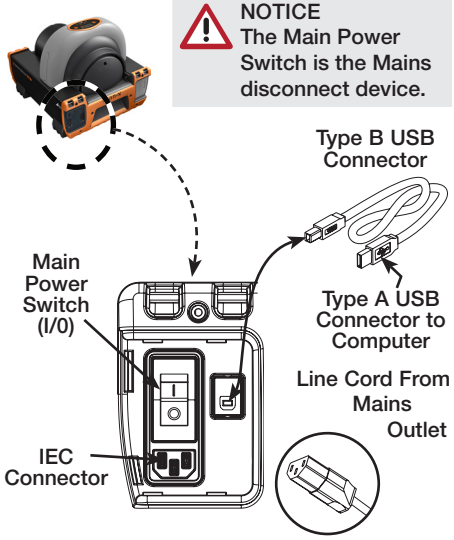

7.4 Mains AC power connection

Perform the following procedure to reconnect the ScanX to a previously initialized computer for normal operation using Mains AC power. Connections are illustrated below.

- Connect the high speed USB cable between the USB Type B connector on the ScanX panel and the USB Type A connector located on the computer.
- Connect the line cord between the Mains outlet and the IEC connector located on the ScanX panel.

NOTICE
Internal battery power continually charges as long as the external AC Mains power is applied via the Main Power switch.

7.5 Battery charging

The internal battery must always be charged prior to using. To reach the full operational power level, charge for at least 3 hours before using for the first time and on subsequent uses. Charge the battery by performing the following steps.

- Connect the AC Mains line cord as shown below.
- Place the Main Power switch to the ON (I) position and make sure that the BATTERY ON/OFF switch is set to the OFF position.
- Allow the battery to charge for at least 3 hours to reach the full operational power level.
- Place the Main Power switch to the OFF (0) position and disconnect the AC Mains line cord.
- Verify that the CHARGE LEVEL indicator illuminates green by depressing the BATTERY ON/OFF switch to the ON position. If the indicator does not illuminate green, refer to Troubleshooting procedures.
- Place the BATTERY ON/OFF switch to the OFF position to retain the charge for field use.

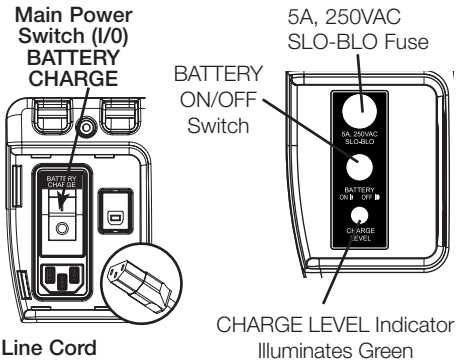

NOTICE
Oil on hands can damage PSPs, make sure to wear gloves to avoid fingerprints when handling PSPs.

8 PSP care and preparation

8.1 Introduction

Prior to performing the imaging procedure provided on the following pages, the user must be familiar with the care, handling and preparation of the PSP in order to ensure successful image scanning. a A typical PSP is shown below.

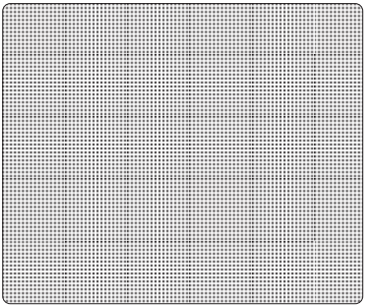

Black Side or Back of PSP

Blue/white or Sensitive Side or Front Side of PSP

8.2 Handle PSPs with care

- Do not crease PSPs.
- Avoid scratching or soiling PSPs.
- Do not store PSPs in a hot or moist area.
- Protect the PSPs from direct sunlight and ultraviolet rays.
- Pick up the PSPs using two fingers around the edges to avoid unnecessary contact with the PSPs.

NOTICE
Use a PSP Protector for each PSP. PSPs may be exposed in cassettes and scanned without PSP Protectors, however, greater care must be exercised to not expose the PSP to light before scanning and to prevent the PSP from being scratched or soiled.

8.3 PSP protection

When storing or transferring PSPs use an X-ray Cassette for PSPs.

PSP Protector. A correct size PSP Protector should be used when handling PSPs so as not to scratch or soil the sensitive surface or nick the edges.

NOTICE
Cassettes must not contain intensifying screens when using PSPs.

X-ray Cassette. Place the PSP with the PSP Protector into the appropriate X-ray Cassette with the sensitive (front) side of the PSP towards the Tube-side of the cassette and close the cassette.

NOTICE
PSPs must always be erased prior to use. Use PSPs within 24 hours of last erasure. Repeat erasing process if PSPs have been stored longer than 24 hours.

8.4 Erasing PSPs

Each PSP should be used (i.e. X-ray exposed and scanned) within 24 hours of erasure since natural radiation will add noise to the PSP. Erase PSPs by simply using the ScanX In-Line Erase Feature. Erasing of PSPs can be accomplished using one of two methods as follows:

EN

NOTICE
Both erasing methods will result in an erased PSP suitable for reuse. The user will not observe any difference in ScanX operation when using either method

Method #1

Perform the Activate Scanner and the Scanning and Erasing PSPs procedures of paragraphs 9.2 and 9.3. Except when performing step 4 of the Activate Scanner procedure, select the Erase option from the installed authorized imaging software to activate the ScanX. This method does not scan the PSP and no image will be acquired.

Method #2

Perform the Activate Scanner and the Scanning and Erasing PSPs procedures on paragraphs 9.2 and 9.3. This method scans the PSP and the imaging software may acquire a "junk image" (scanned latent image) that should be subsequently deleted from the imaging software.

8.5 Cleaning PSPs

For the best images, PSPs and PSP Protectors should be handled carefully and kept clean. Use specially formulated IP Cleaning Wipes (P/N CCB351A1001) to clean all PSPs and PSP Protectors. These single-use extra soft, 100% polyester fabric wipes will not scratch or damage while safely removing dust, hair, dirt and smudges from the imaging surface. Use one wipe and clean PSPs as follows:

- As shown below, gently wipe the PSP Cleaning Wipe over the dry PSP surface. Wipe back and forth and then in a circular motion.
- Allow the PSP surface to air dry. Make sure that the PSP is completely dry before re-using.

PSP Cleaning

8.6 Disposal of PSPs

Consult with your federal, national, state and local government, for rules and regulations on disposal of PSPs.

NOTICE
Make sure that the X-ray imaging technique conforms to the intended application requirements/specifications. Cassettes must not contain intensifying screens when using PSPs.

9 Imaging procedure

9.1 Take an X-Ray image

- Put an image on the PSP by performing the following procedure.
- Load cassette containing an erased PSP in a PSP Protector into the exposure device as previously done with film.
- Take the exposure.
- Bring the closed cassette housing the exposed PSP to the ScanX. The PSP is now ready to be scanned.

9.2 Activate scanner

Activate the ScanX via AC power or the internal Battery power by performing the following procedures.

- Make sure the ScanX is properly setup and perform either step a or b depending on power used.
- Activation via AC Mains - place only the Main Power switch to ON.
- Activation via Battery Power - place both the Main Power switch to ON and Press the BATTERY ON/OFF switch to the ON position (flush with the panel). Make sure the CHARGE LEVEL indicator illuminates.
- Switch the scanner from standby to ON by pressing the READY switch located on the Membrane Keypad.

NOTICE
Eraser mode is enabled as factory default. Eraser setting is retained as set in last scan field operation.

- Verify that the green LED indicator above the READY switch illuminates.
- Run the user-supplied authorized Imaging Software to activate the scanner and to select the desired image type and resolution.
- Verify that the four scanner track status indicators illuminate green when the scanner has been activated, indicating that a PSP can be fed into the ScanX. If the indicators do not light, refer to Troubleshooting procedures.

EN

1a

Activation via AC Mains
Place Main Power Switch (I/0) to ON (I) position.

Note: Make sure AC line cord is connected to IEC connector.

OR

1b

Activation via Battery
Place both Main Power Switch and BATTERY ON/ OFF switch to ON

Make Sure CHARGE LEVEL Indicator is Green

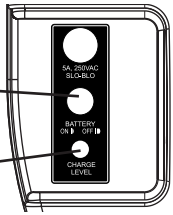

2

Press the READY switch to turn ON the ScanX.

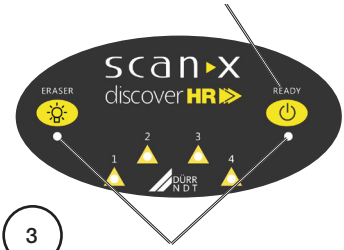

3

Verify that the READY indicator illuminates

4

Activate the scanner via the authorized Imaging Software

5

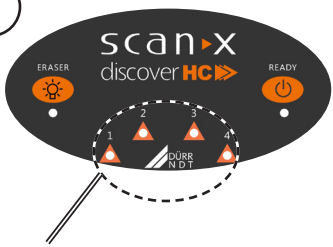

Verify that all 4 track status indicators illuminate

9.3 Scanning and erasing PSPs

Scan and erase an PSP in one operation as follows.

- Orient the cassette so that the Tube side is facing down and the hinge is away from you.
- Open the cassette and grasp the PSP Protector guide flaps to lift out the PSP Protector enclosed PSP. Pinch guide flaps between the thumb and index finger to prevent the PSP from sliding out of the PSP Protector. While minimizing exposure to ambient light, move it to the ScanX inlet with the sensitive (front) side of PSP towards the ScanX.
- As shown below, position the PSP Protector containing the PSP against the curved inlet, surface and hold it flush against the scanner inlet. A PSP Protector containing an exposed PSP narrower than 14 inches may be centered on the scanner inlet, making sure that it is aligned.

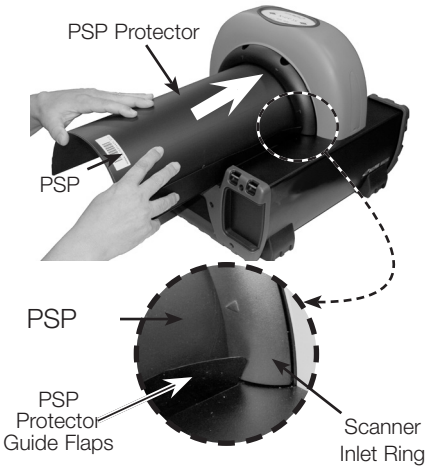

EN

NOTICE
Avoid damage to the ScanX transport by making sure that the PSP protector does not get pulled into the transport along with the PSP.

- Gently slide the PSP and Protector assembly into the scanning slot until the Protector is stopped by both guide flaps resting on the inlet ring which further aids in alignment.
- At this point, all four track lights will turn yellow, indicating the PSP has been sensed and the scanner is transporting the PSP.
- Observe that a red glow emanates from the scanner exit slot.
- Repeat steps to process additional PSPs as necessary. Another PSP may be fed into the ScanX when all four track indicator lights illuminate green.
- Observe that the scanned PSP exits through the scanner arch. Since the ScanX default operation mode is with the erase mode enabled (blue LED indicator below the ERASER switch is illuminated or flashing), the PSP is erased and ready for reuse for a new image.
- Observe that all transport status indicators illuminate green and the red glow from the exit slot extinguishes after the last PSP exits.
- Retrieve the processed (scanned and erased) PSP for reuse or storage. Make sure not to scratch the sensitive surface or nick the edges when removing from the scanner outlet.
- View and save the image using features of the user-supplied authorized Imaging Software.

NOTICE
PSPs will not be erased after scanning when operating the ScanX with the eraser disabled. New images always erase PSPs prior to X-rays exposure.

9.4 Scanning PSPs without erasing

The ScanX can be operated with the in-line eraser feature turned off. When the eraser mode is disabled, the ScanX scans the same as when the eraser is enabled except that the PSPs are not erased after scanning. Scan an PSP without erasing the image by performing the following procedures.

- Activate the scanner by performing the procedures of paragraph 9.2.

NOTICE
Always check that the eraser mode is disabled upon activation. The ScanX defaults to the mode last used at power turn off.

- If necessary, disable the eraser mode of operation by pressing the ERASER switch located on the Membrane Keypad.
- Verify that the blue LED indicator located below the ERASER switch is extinguished to indicate that the Erase function is OFF. The PSP will not be erased after scanning.
- Insert the PSP to be scanned into the ScanX by performing the Scanning and Erasing PSPs procedures provided by paragraph 9.3.

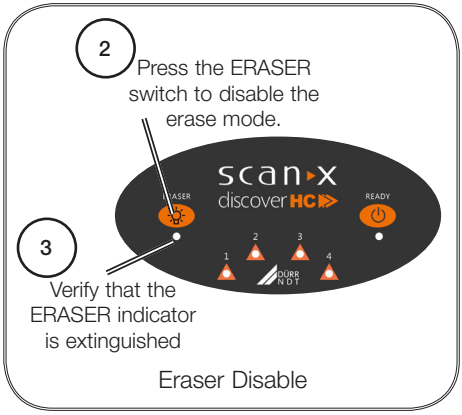

9.5 Eraser mode only

The ScanX can be used to just erase PSPs. This is done simply by selecting the Erase option (instead of Scan) from the installed authorized imaging software when activating the ScanX. During the Erase Only mode just the in-line eraser is activated. The PSP is transported through the ScanX as a normal scan but is not scanned. No image is acquired and the PSP is erased and ready for reuse as necessary. Make sure the eraser mode of operation is enabled (ON). See Method #1 of paragraph 9.2, Erasing PSPs.

EN

NOTICE
Never power down the system during a scanning session.

9.6 ScanX power removal

The battery power on ScanX models operating from the built in battery should be turned off when not used for extended periods. ScanX models operating from AC Mains are designed to be left on continuously during the active day. At the end of the day, or whenever desired, power down the system as shown to the right and the following steps:

- Place the ScanX in the Standby mode by pressing and holding the membrane READY switch on the Membrane Keypad (approximately 2 seconds) until the green LED above the READY switch extinguishes.
- Verify that the READY indicator extinguishes.
- Remove the power to the ScanX by performing one of the following steps depending on operating power used.

  a. When operating from the battery, press the BATTERY push button to place the switch in the OFF (raised) position. Verify the CHARGE LEVEL indicator extinguishes.

  b. When operating from AC Mains, place the Main Power switch to the OFF (0) position.

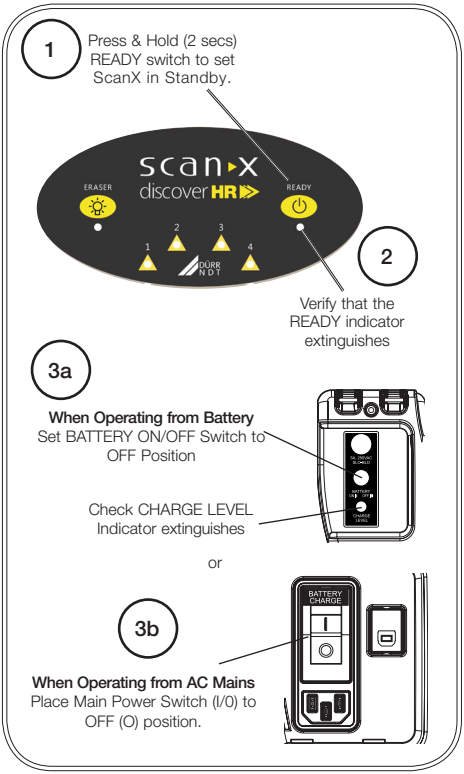

EN

10 Tips for operators and service technicians procedure

10.1 Fault on the unit

Any repairs above and beyond routine maintenance must only be carried out by suitably qualified personnel or by one of our service technicians.

Prior to working on the device or in case of danger, disconnect it from the mains (e. g. pull the mains plug).

Fault	Probable Cause	Corrective Action
1. No power/No green light on membrane switch.	No battery power.	› Check CHARGE LEVEL, charge battery as necessary.
	Not plugged in.	› Check that the line cord is firmly plugged in.
	No power at Mains Outlet.	› Make sure outlet is grounded and has power.
	Battery fuse blown or not installed.	› Make sure that the battery fuse is installed.
	The ScanX has not been turned on.	› Make sure that the Main Power switch is set to ON.
	Defective power supply.	› Call your authorized dealer.
2. Green, Blue or Yellow indicator does not light.	Defective light or circuitry.	› Call your authorized dealer.
3. Imaging Software does not recognize the ScanX when selected.	Inadequate Computer System.	› Verify Computer System requirements (Appendix A).
	The ScanX has not been turned on.	› Verify that the READY switch is set to ON and the green indicator is lit.
	The computer cable is loose or defective.	› Reconnect the cable. Check for tightness. Replace if necessary.
	Computer does not recognize that the ScanX is connected.	› Verify that the Setup program was correctly installed
	ScanX hardware problem.	› Call your authorized dealer.
	ScanX Driver CD not run.	› Verify that the Setup program was correctly installed.
4. PSP does not scan properly.	PSP was not pushed far enough into ScanX.	› Check the PSP protector tabs and fully feed the PSP into the ScanX.
	Worn transport belt or belt driver.	› Replace defective transport belt or belt driver.

10.2 Poor X-ray image

Fault	Probable Cause	Corrective Action
5. No image seen after scanning.	The PSP fed backwards (printed side towards ScanX).	› Quickly re-feed the PSP with the printed side out. If a substandard image results, retake image.
	The PSP was erased (exposed to light) prior to scanning.	› Feed the PSPs into the scanner immediately and quickly from the cassette.
	Hardware failure.	› Call your authorized dealer.
	X-ray source failed or low exposure.	› Call your authorized dealer.
6. Image is too dark.	PSP has been over exposed	› Use software to adjust brightness. If this is not possible, retake image with proper (lower) exposure and a newly erased PSP. › Make sure intensifying screens are removed.
7. Image appears skewed on monitor.	PSP was fed skewed.	› When inserting PSP into feed slot, be sure to “feel” resistance of light seal brush, align PSP, and push down uniformly on top edge of PSP.
	Worn transport belt or belt driver.	› Check the PSP protector tabs. › Replace defective transport belt or belt driver.
8. Image contains ghost images or shadows.	PSP was not completely erased prior to use.	› Make sure the ScanX is operating with both eraser strips turned on (blue LED indicator below the ERASER switch is flashing).
	Imaging PSP was exposed with the back facing the tubehead.	› Do not store PSPs in cassettes for more than 24 hours.
	PSP stored too long in cassette.	› Select a suitable scanning mode.
	Partial image erasure due to exposure to light during handling of the PSP	› Do not leave exposed PSPs in well lit areas. Transfer PSPs from their protective cassettes to the ScanX within one hour of exposure. › Make sure red erasing light emanates from both sides of the ring.
9. Image shows artifacts or white or black lines.	The PSP surface is not clean and has dirt, stains or scratches on it.	› Clean the PSP with IP Cleaning Wipes.
	ScanX PSP transport path may contain an obstruction, debris or dust.	› Make sure to handle PSPs properly. › Do not reuse the PSP if scratched or stained. › Clean transport path using a ScanX cleaning sheet

EN

11 Maintenance

11.1 General maintenance

NOTICE
Do not spray solvents or liquid directly on the scanner.

Cleaning the ScanX

Turn off the ScanX disconnect the line cord from the Mains wall outlet and disconnect the computer connection cable from the ScanX before cleaning. Wipe the outside surfaces with a soft paper towel dampened with a disinfectant solution or non-abrasive household cleaner. Be careful not to allow solvents TO RUN OR DRIP into the ScanX. This could cause damage to the ScanX. Allow to air dry before plugging in or turning back on.

Cleaning the PSP Transport

Over time, small debris and dust can accumulate in the PSP transport mechanism causing a loss in image quality and possible damage to the PSPs. To ensure optimal performance of the ScanX, the PSP transport should be cleaned at least once per week using a new ScanX Cleaning Sheet each time. Sample sheets are included with the ScanX and additional sheets can be purchased from your dealer.

PSPs

PSP's are subject to "wear" on the black side during normal handling and use. They can appear scratched, while the sensitive blue or white side remains relatively "smooth". This scratched look on the black side has absolutely no effect on the quality of the image and should be expected under normal conditions. If the phosphor side is scratched make sure the PSPs are being handled properly and not being dragged from the ScanX tray area or other surfaces that could cause scratching of the PSP. Make sure to review the PSP Care and Preparation information provided by section 8 of this manual.

11.2 Scheduled maintenance

Like all precision products, the ScanX requires a certain amount of care on a regularly scheduled basis. A well-organized maintenance program aids dependable equipment operation and reduces problems to a minimum. Routine checks help to detect general overall wear, and replacement of parts can often be made before a problem occurs. Adherence to the maintenance schedule will ensure that the ScanX Digital Imaging System will continue performing at its best with uninterrupted service.

Understanding this, we have established three basic maintenance kits that will help ensure continuous operation of the ScanX Digital Imaging System. The kits and their associated parts number along with the recommended performance schedule are listed below.

NOTICE
All service requiring access to the interior of the ScanX must be performed only by an authorized dealer service technician with the proper training.

Service Requirement	Schedule	Kit	Part No.
Replace dust/debris brush on inlet ring assembly	1 year	Wiper Brush, package of 10	2138100032
Replace four transport belt drive belt assemblies	4 years	Transport belt drive assembly, set of 4	2138100108
Replace 5A, 250VAC, 3AG Slo-Blo Battery fuse.	As Needed	Fuse, package of 2	2138100111

12 Appendix A

12.1 Computer system requirements

ScanX must be connected to a compliant Computer System supplied by the customer. In addition, authorized third party imaging management software, purchased from your dealer or other company, must be installed on the computer in order to operate ScanX.

Smooth operation of hardware and software can be affected through specific hardware and software incompatibility on site at the client despite meeting system requirements. Where further systems are connected to the PC please note that this may change the system requirements. Observe the system requirements for all connected systems.

Computer System Required Components

The minimum computer system, computer and monitor, requirements necessary to operate ScanX are listed below.

Operating System	Microsoft Windows 7 Professional, Enterprise, or Ultimate with Service Pack 1 for an Intel 32-bit or an Intel 64-bit extended (x64) processor; Microsoft Windows 8.1 Professional or Enterprise for an Intel 64-bit extended (x64) processor; or Microsoft Windows 10 Professional or Enterprise for an Intel 64-bit extended (x64) processor.
CPU/Speed	Pentium-4, 1.4 GHz or faster required. Celeron and Duron not supported. 3.0 GHz Intel CORE2 recommended.
USB Port/Version	USB 2.0 or later
Hard Drive	At least 10 GB of free space is required to install the software. At least 200 MB of free space is required to start scanning. 500 GB recommended.
System RAM	1 GB required. 2 GB recommended.
Image Management	VistaEasy & Scanx View supplied or other compatible authorized third party
Software	software (not included with product)
Optical Drive	Device capable of reading a CD-ROM required

Recommended Components

The items listed below are recommended (but not required) computer system components to aide in ScanX operation

Monitor	SVGA 24”, 1280 x 1024 or higher resolution, contrast ratio 10,000:1, .22 dot pitch or better.
Peripherals	Standard Keyboard & Mouse
	Backup Device
	External Surge Protector
	Power supply backup

EN

System Properties.

If unsure of the operating system version installed, check that it meets the necessary requirements by checking the System Settings window as shown below.

The System Settings window can also be opened from the Control Panel button. Just press the Start button and select Control Panel and then click the System icon.

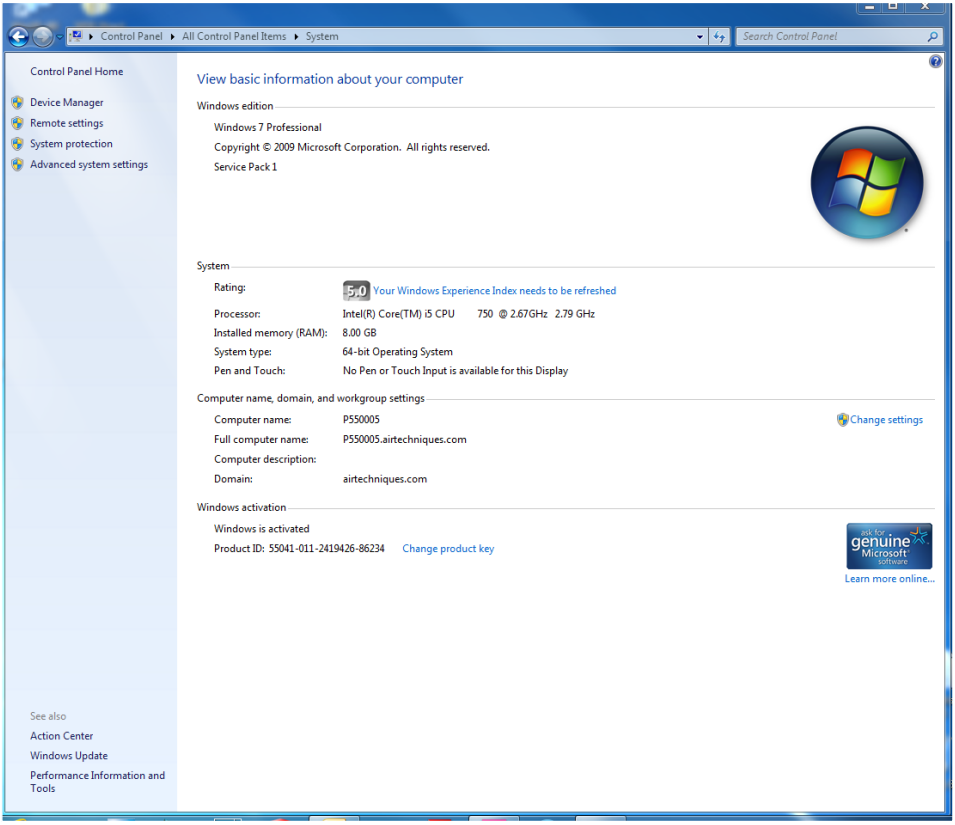

P/N 2138100300 Rev. A · May 2017

DÜRR NDT GmbH & Co. KG
Höpfigheimer Straße 22
74321 Bietigheim-Bissingen, Germany
Phone: +49 7142 99381-0 · Fax: +49 7142 99381-299
www.scanx-ndt.com